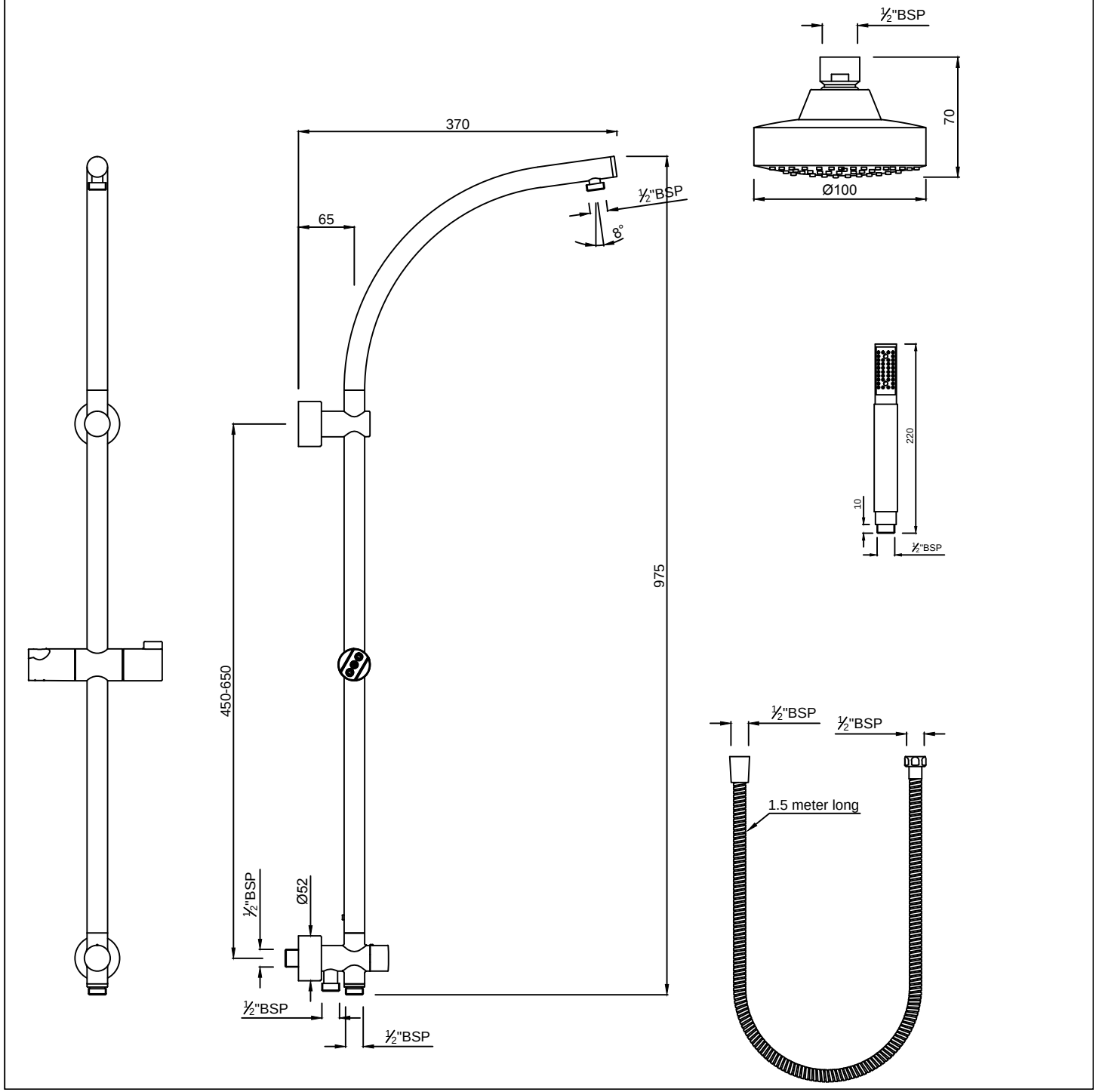Exposed Shower Pipe with Provision for Simultaneous Working of Showers with Operating Diverter Knob	CAT.NO. SHA-1217RSHK1